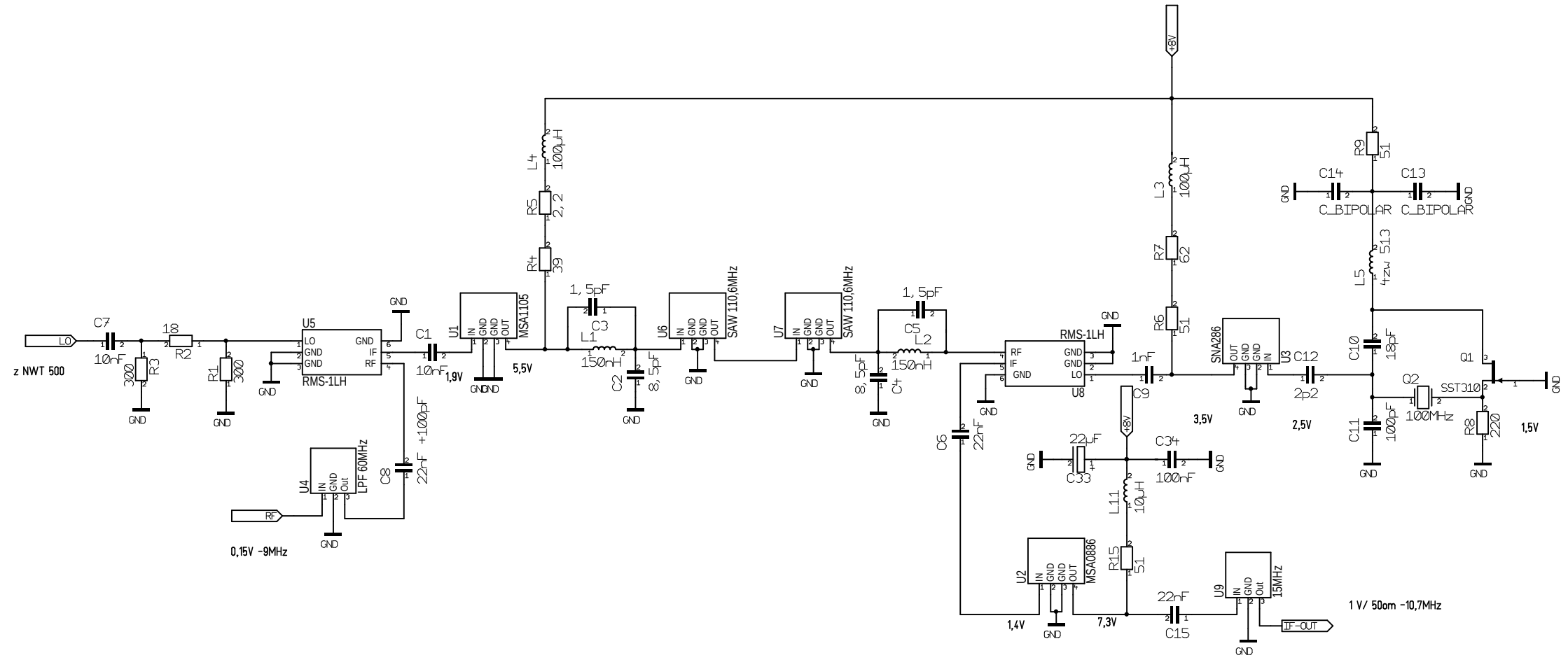
LO
z NWT 500
C7
10nF
R3
300
R2
18
R1
300
U5
LO
GND
GND
GND
IF
RF
RMS-1LH
C1
10nF
1,9V
U1
IN
GND
GND
OUT
MSA1105
5,5V
U4
IN
GND
Out
LPF 60MHz
RF
0,15V -9MHz
C8
22nF +100pF
L4
100µH
R5
2,2
R4
39
1,5pF
C3
L1
150nH
C2
8,5pF
U6
IN
GND
GND
OUT
SAW 110,6MHz
U7
IN
GND
GND
OUT
SAW 110,6MHz
1,5pF
C5
L2
150nH
8,5pF
C4
RMS-1LH
RF
IF
GND
GND
GND
LO
U8
C6
22nF
1nF
C9
+8V
22µF
C33
C34
100nF
L11
10µH
R15
51
U2
IN
GND
GND
OUT
MSA0886
1,4V
7,3V
22nF
C15
U9
IN
GND
Out
15MHz
IF-OUT
1 V/ 50om -10,7MHz
L3
100µH
R7
62
R6
51
SNA286
OUT
GND
GND
IN
U3
C12
2p2
3,5V
2,5V
R9
51
C14
C13
C_BIPOLAR
C_BIPOLAR
L5
513
4zw
C10
18pF
C11
100pF
Q1
Q2
SST310
100MHz
R8
220
1,5V
GND